K2 SEATING

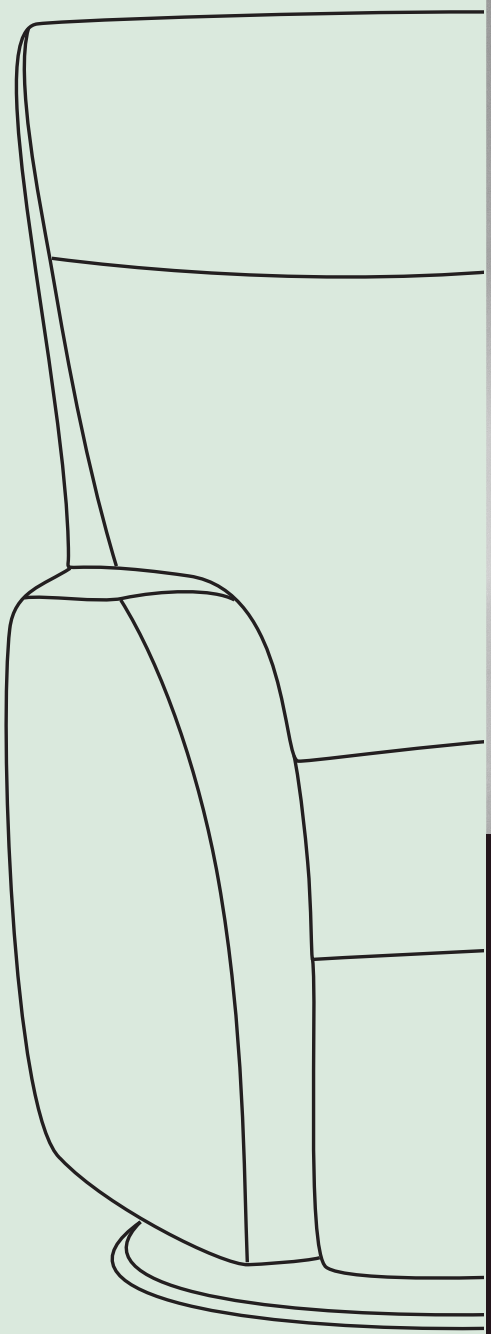

Relax along the lines of the Norwegians™

Assembly Instruction

Nordic Relax - Manual

1

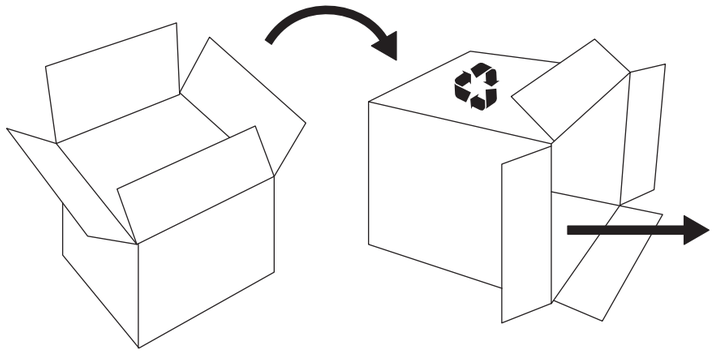

2

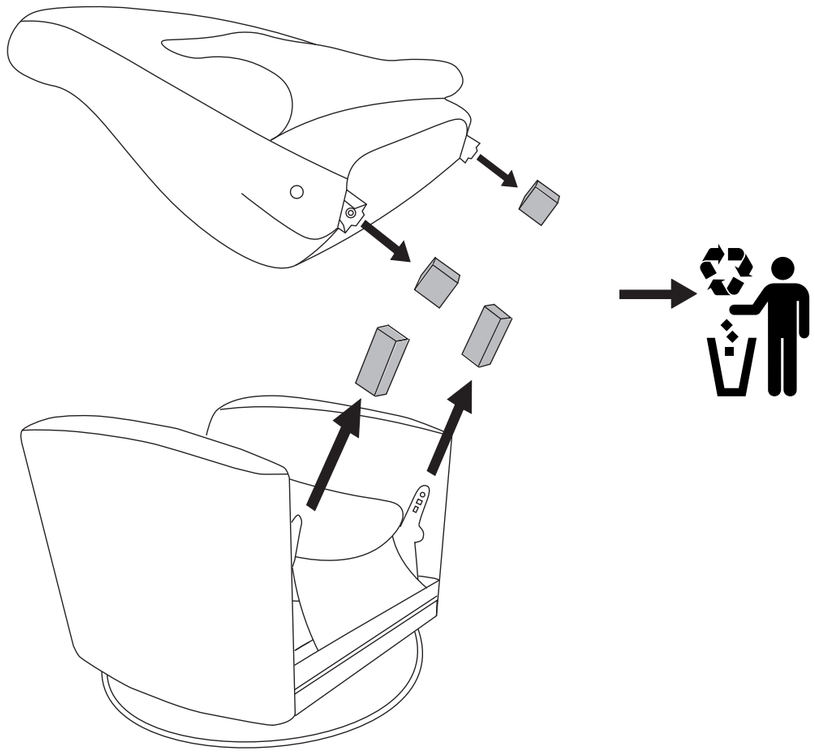

3

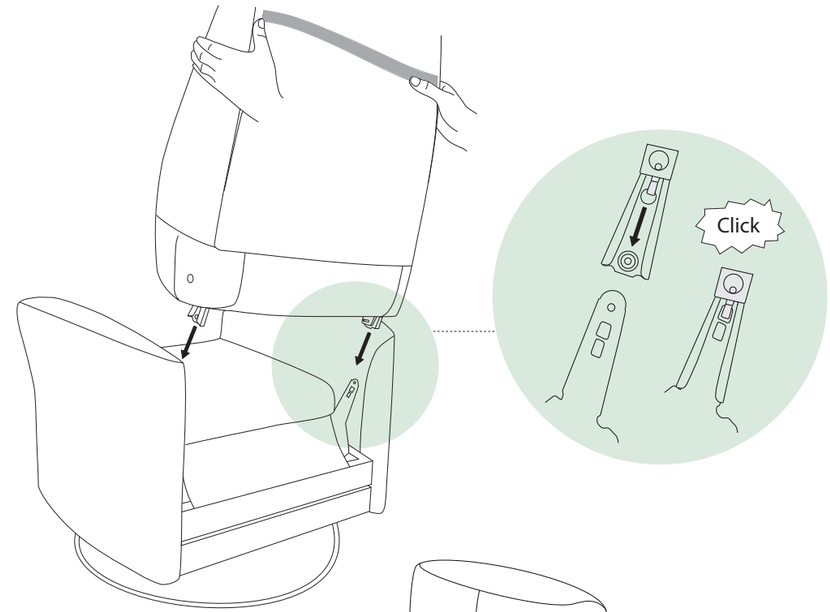

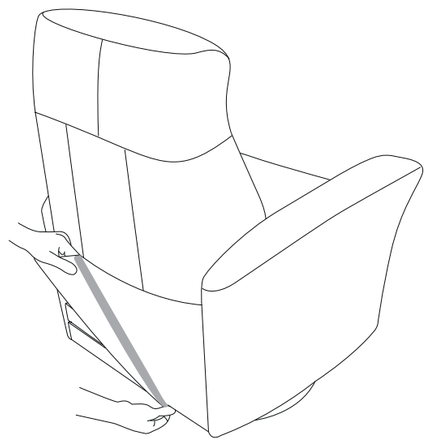

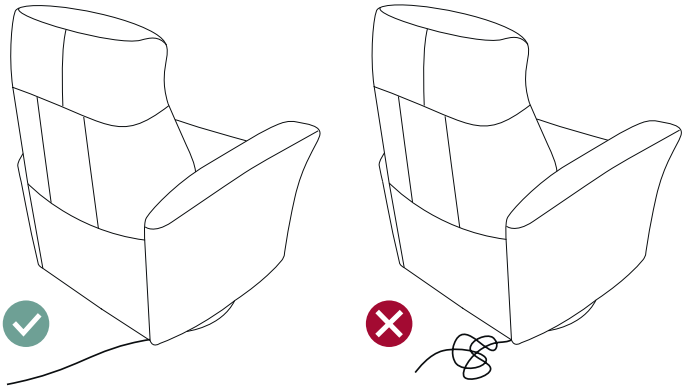

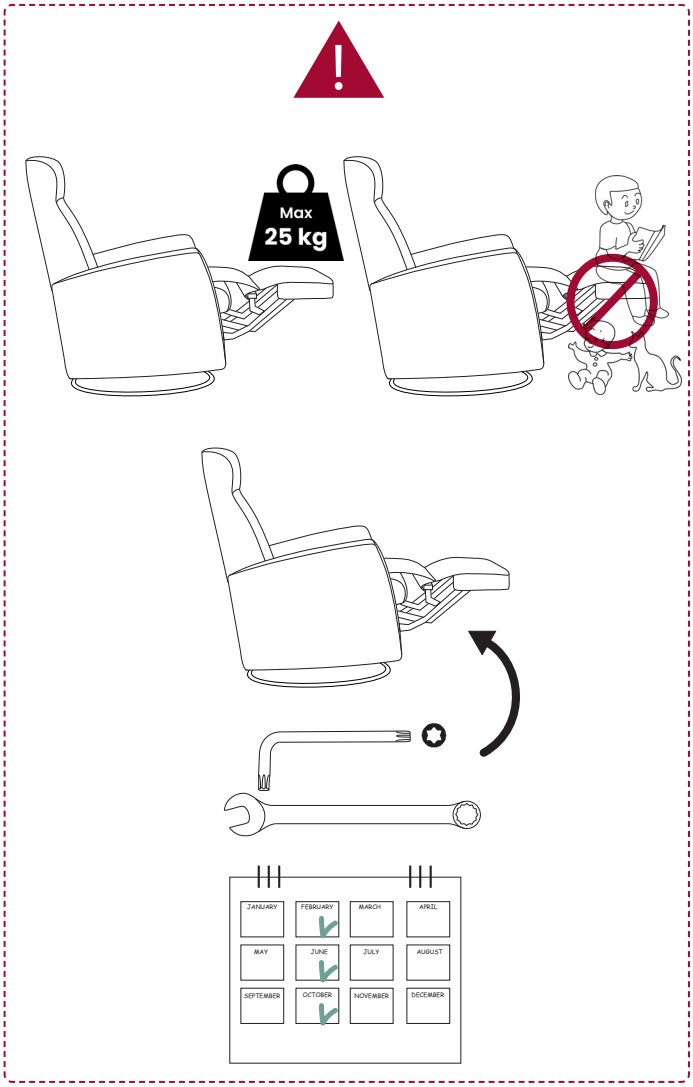

This product is manufactured in Thailand by H2 Seating Ltd.
99 Moo 3, Thepparaj, Banpho Chachoengsao 24140 Thailand

H2 SEATING

H2 NORWAY AS
Breivika Industriveg 63
N-6018 Ålesund
Norway

h2seating.com